Regency
the first name in solid state

PROFESSIONAL
2 WAY action radio

DATE 4-20-84

SSC Service Bulletin

no. 84-342

TO: ALL REGENCY COMMUNICATIONS PROFESSIONAL SALES AND SERVICE CENTERS
ALL REGENCY COMMUNICATIONS PROFESSIONAL SALES REPRESENTATIVES

MODELS AFFECTED: MCCU15RA, MCBU19A PA BOARD 504-165, REV. G AND FOLLOWING

PROBLEM: POWER AMPLIFIER IS NOT STABLE

SOLUTION:

1. Change R109 from 100 ohms to 22 ohms, comp 1/4W 10%, P/N 4700-0220-042.
2. Add C123, .01uF with 0.75" leads, Y5P 100 VDC, P/N 1501-0103-031.
3. Change reference designator on 20pF capacitor formerly C123 to C139.

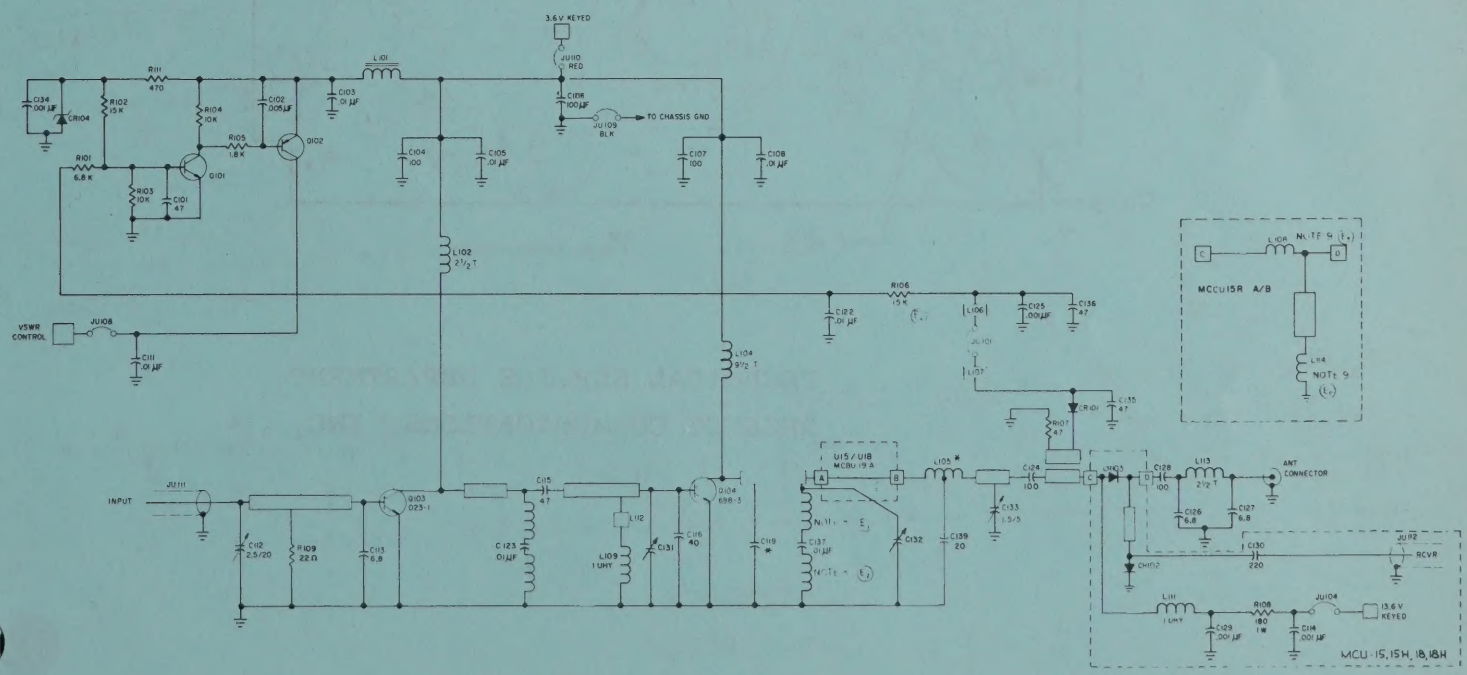

AD307

Form No. 138 UB

Main Board Parts Placement

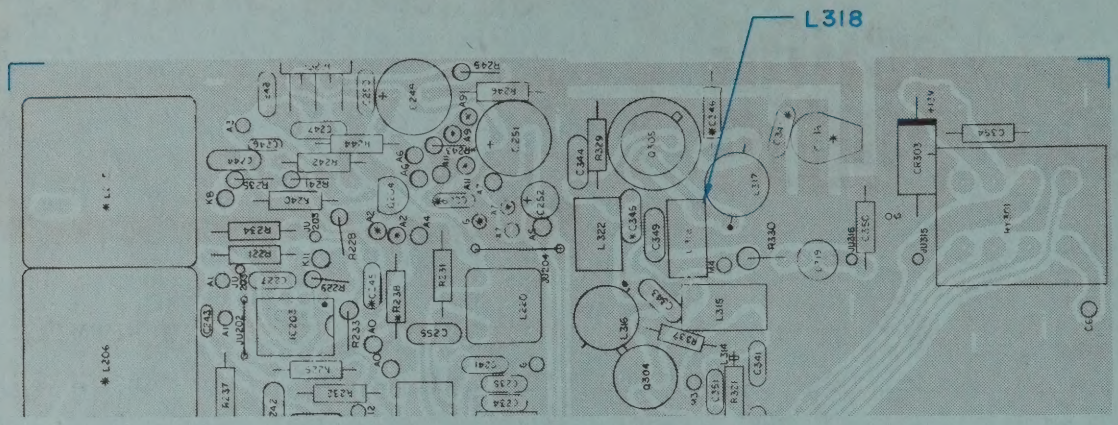

4. MCCU15RA change only.

Change L318 on Main Board to 1803-5125-901, 21/2T, LM-2.

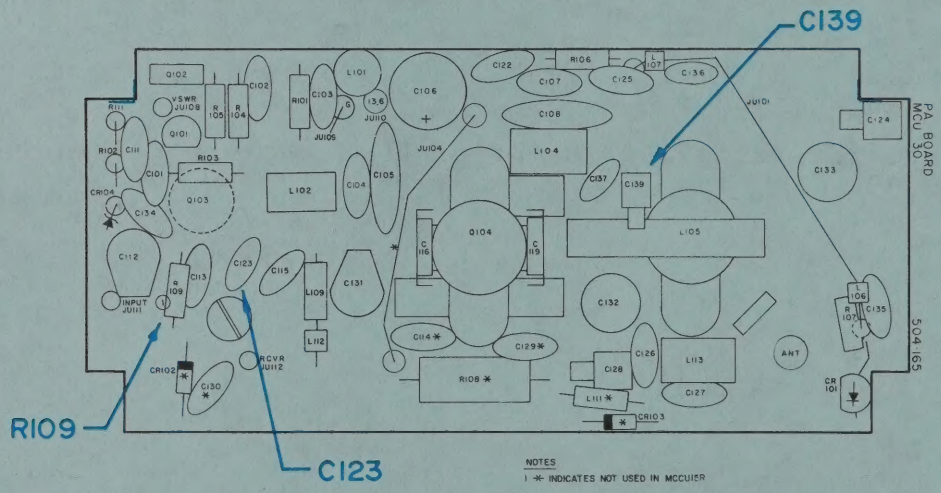

TECHNICAL SERVICE DEPARTMENT
REGENCY COMMUNICATIONS, INC.

Regency
the first name in solid state

PROFESSIONAL
2 WAY action radio

DATE 4/20/84

SSC Service Bulletin

no. 84-343

TO: ALL REGENCY COMMUNICATIONS PROFESSIONAL SALES AND SERVICE CENTERS
ALL REGENCY COMMUNICATIONS PROFESSIONAL SALES REPRESENTATIVES

MODELS AFFECTED: MCU315B, MCBU35B, MCU34H, PA PCB 504-165, REV. G AND FOLLOWING

PROBLEM: POWER AMPLIFIER NOT STABLE

SOLUTION:

1. Change R109 from 100 ohms to 47 ohms, comp 10%, P/N 4700-0470-042.
2. Add C123, .01uF with 0.75" leads, Y5P, 100 VDC, P/N 1501-0103-031.

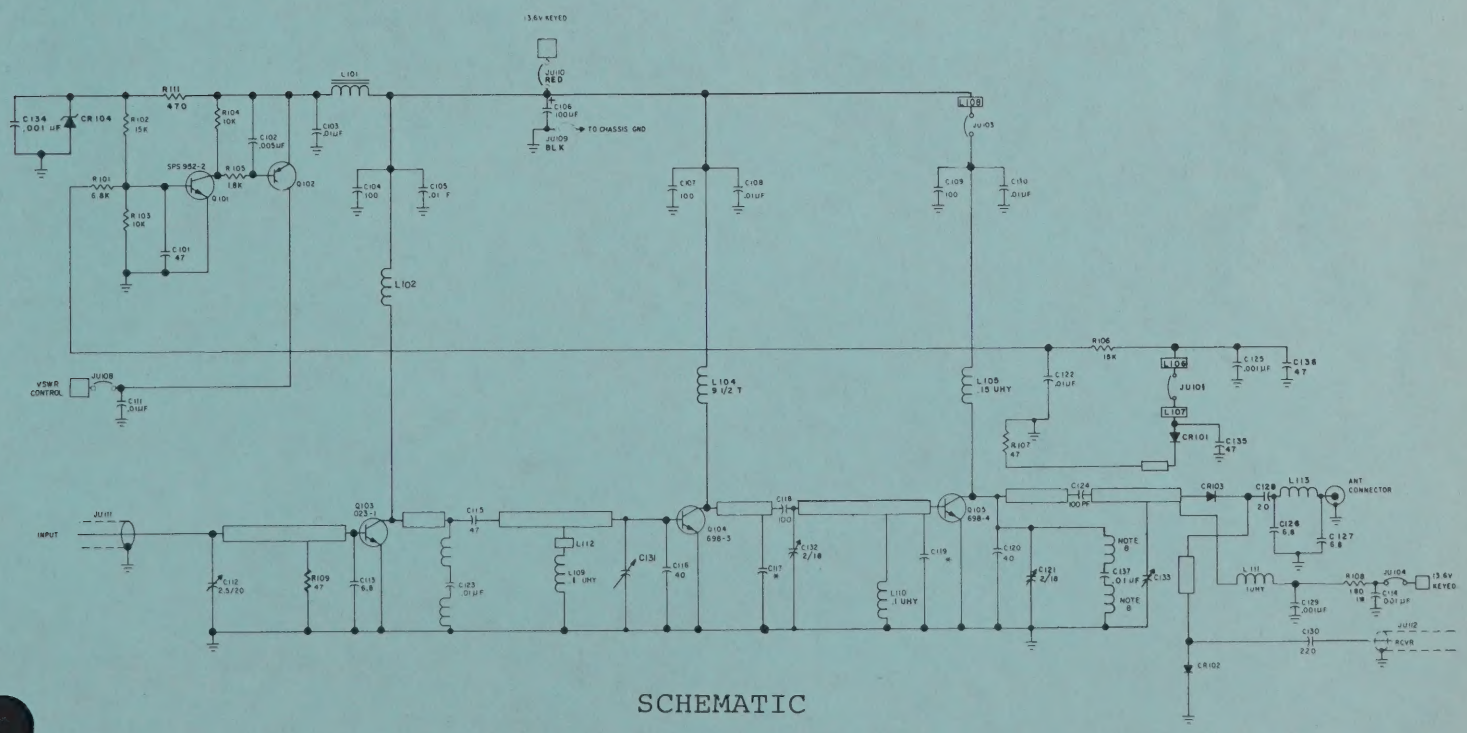

SCHEMATIC
MCU30 P.A.
604-095E

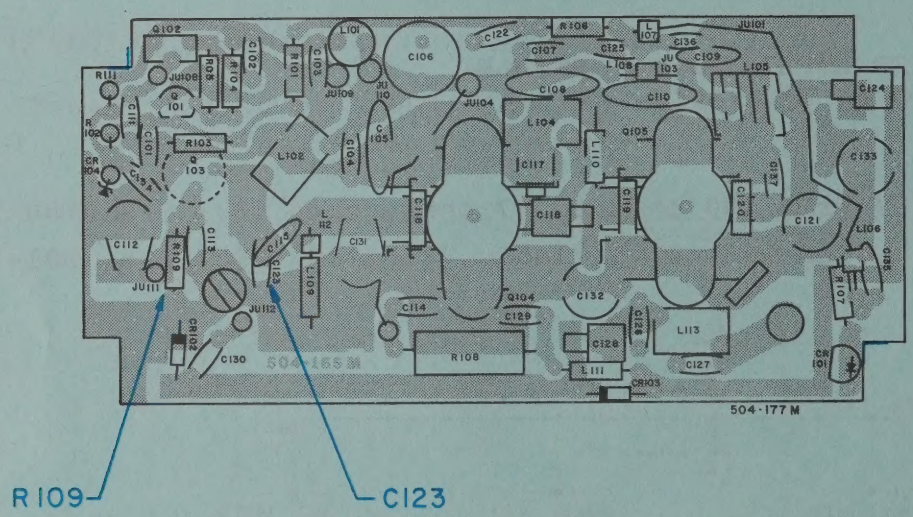

R109

C123